Self-Enclosed Shark® Meter Assembly

- For Retrofit Meter Solutions
- Extends Switchgear Capability
- Pre-Wired and Configured
- Eliminates Wiring and Installation Errors

Installation & Operation Manual
V.1.04
March 6, 2013

Electro Industries/GaugeTech
The Leader In Power Monitoring and Smart Grid Solutions

1800 Shames Drive, Westbury, NY 11590 Tel: (516) 334-0870 Fax: (516) 338-4741 Email: sales@electroind.com

www.electroind.com

This page intentionally left blank.

Shark® Meter In Enclosure Assembly Installation and Operation Manual Version 1.04

Published by:

Electro Industries/GaugeTech

1800 Shames Drive

Westbury, NY 11590

All rights reserved. No part of this publication may be reproduced or transmitted in any form or by any means, electronic or mechanical, including photocopying, recording, or information storage or retrieval systems or any future forms of duplication, for any purpose other than the purchaser's use, without the expressed written permission of Electro Industries/GaugeTech.

© 2013 Electro Industries/GaugeTech

Shark® is a registered trademark of Electro Industries/GaugeTech. The distinctive shapes, styles and overall appearances of all Shark® meters are trademarks of Electro Industries/GaugeTech.

Customer Service and Support

Customer support is available 9:00 am to 4:30 pm, Eastern Standard Time, Monday through Friday. Please have the model, serial number and a detailed problem description available. If the problem concerns a particular reading, please have all meter readings available. When returning any merchandise to EIG, a return materials authorization number is required. For customer or technical assistance, repair or calibration, phone 516-334-0870 or fax 516-338-4741.

Product Warranty

Electro Industries/GaugeTech warrants all products to be free from defects in material and workmanship for a period of four years from the date of shipment. During the warranty period, we will, at our option, either repair or replace any product that proves to be defective.

To exercise this warranty, fax or call our customer-support department. You will receive prompt assistance and return instructions. Send the instrument, transportation prepaid, to EIG at 1800 Shames Drive, Westbury, NY 11590. Repairs will be made and the instrument will be returned.

This warranty does not apply to defects resulting from unauthorized modification, misuse, or use for any reason other than electrical power monitoring. The Shark® Meter in Enclosure assembly is not a user-serviceable product.

THIS WARRANTY IS IN LIEU OF ALL OTHER WARRANTIES, EXPRESSED OR IMPLIED, INCLUDING ANY IMPLIED WARRANTY OF MERCHANTABILITY OR FITNESS FOR A PARTICULAR PURPOSE. ELECTRO INDUSTRIES/GAUGETECH SHALL NOT BE LIABLE FOR ANY INDIRECT, SPECIAL OR CONSEQUENTIAL DAMAGES ARISING FROM ANY AUTHORIZED OR UNAUTHORIZED USE OF ANY ELECTRO INDUSTRIES/GAUGETECH PRODUCT. LIABILITY SHALL BE LIMITED TO THE ORIGINAL COST OF THE PRODUCT SOLD.

Use of Product for Protection

OUR PRODUCTS ARE NOT TO BE USED FOR PRIMARY OVER-CURRENT PROTECTION. ANY PROTECTION FEATURE IN OUR PRODUCTS IS TO BE USED FOR ALARM OR SECONDARY PROTECTION ONLY.

Statement of Calibration

Our instruments are inspected and tested in accordance with specifications published by Electro Industries/GaugeTech. The accuracy and a calibration of our instruments are traceable to the National Institute of Standards and Technology through equipment that is calibrated at planned intervals by comparison to certified standards. For optimal performance, EIG recommends that any metering device, including those manufactured by EIG, be verified for accuracy on a yearly interval using NIST traceable accuracy standards.

Disclaimer

The information presented in this publication has been carefully checked for reliability; however, no responsibility is assumed for inaccuracies. The information contained in this document is subject to change without notice.

Symbols Used in This Manual

This warning symbol indicates that the operator must refer to an important explanation in the operating instructions. The word following the symbol indicates the type of warning being given.

CAUTION! The instructions given must be followed to prevent damage to equipment.

WARNING! The instructions given must be followed to prevent serious injury to people.

This page intentionally left blank.

Table of Contents

Customer Service and Support	ii
Product Warranty	ii
Statement of Calibration	iii
Disclaimer	iii
Symbols Used in This Manual	iii
1: Introduction	**1-1**
1.1: Product Handling	1-1
1.2: Safety Precautions	1-2
1.3: Storage	1-2
2: Installation	**2-1**
2.1: Recommended Procedures for Making Wire Entry Holes	2-4
2.2: Installation	2-6
2.2.1: Installation Steps	2-9
2.3: Door-locking Instructions	2-10
3. Electrical Wiring	**3-1**
3.1: Wiring Instructions	3-2
3.2: 3 Wire Delta, 3 CT Hookup	3-4
4: Operation	**4-1**
5. Maintenance	**5-1**
5.1: Removing a Meter From Service	5-1
5.2: Reinstalling the Meter	5-3
6. Ordering Information	**6-1**

This page intentionally left blank.

1: Introduction

The Self-Enclosed Shark® Meter Assembly lets you expand your switchgear capability without expensive and time-consuming redesign. Simply mount and wire the enclosure next to your switchgear and you are ready to go, with no downtime at all! This is an ideal solution for a retrofit when there is no metering compartment available. The unit comes standard with a NEMA 1 enclosure and is factory wired with the meter installed. Standard equipment includes voltage fuses, a shorting block for current transformer connections, and a control power transformer if used with 277/480 Volt power systems.

The enclosure can be ordered with either the Shark® 50 multi-function meter, the Shark® 100 multi-function meter, the Shark® 100B meter with native BACnet/IP protocol, or the Shark® 200 advanced meter with datalogging and extensive I/O. It is offered in two voltage configurations:

- 277 Volt enclosure (which comes equipped with a control power transformer)
- 120-240 Volt enclosure

1.1: Product Handling

CAUTION! READ AND UNDERSTAND THE INSTRUCTIONS CONTAINED IN THIS DOCUMENT BEFORE ATTEMPTING TO UNPACK, INSTALL, OPERATE, OR MAINTAIN THIS EQUIPMENT.

Every effort is made to insure that the equipment arrives undamaged and ready to be installed. Packing is designed to protect internal components as well as the enclosure. Do not remove protective packing until you are ready to install the equipment.

When you receive the equipment, you should inspect the shipping container for any obvious signs of rough handling and/or external damage that occurred during transportation. Record any external and internal damage for reporting to the transportation carrier and EIG. All claims should be as specific as possible and include general order numbers.

You will find a plastic bag of instruction booklets and/or CDs in the shipping container. Store these documents in a safe place.

1.2: Safety Precautions

WARNING! All safety codes, safety standards, and/or regulations must be strictly observed in the installation, operation, and maintenance of this device.

Hazardous voltages that can cause death or severe personal injury are present inside enclosure. Follow proper installation, operation, and maintenance procedures to avoid these voltages.

Completely read and understand the material presented in this document before attempting installation, operation, or application of the equipment. In addition, only qualified persons should be permitted to perform any work associated with the equipment. Any wiring instructions presented in this document must be followed precisely. Failure to do so could cause permanent equipment damage.

All possible contingencies that may arise during installation, operation, or maintenance, and all details and variations of this equipment do not purport to be covered by these instructions. If further information is desired by purchaser regarding a particular installation, operation, or maintenance of particular equipment, contact an Electro Industries/GaugeTech (EIG) representative.

1.3: Storage

Although it has been well packaged, this equipment should not be stored outdoors. If the equipment is to be stored indoors for any period of time, it should be stored with its protective packaging in place. Refer to the Shark® 50/100/100B and Shark® 200 Installation and Operation manuals, on the enclosed CD, for the meter's storage requirements.

The temperature rating for enclosure storage is (-20 to +50)^{o} C.

1.4: Compliance

Type 1 enclosure, UL / cUL Listed, file number: E358101.

2: Installation

WARNING!

All safety codes, safety standards, and/or regulations shall be strictly observed in the installation, operation, and maintenance of this device. **This device shall be installed in an un-energized condition and as per the National Electric Code.**

Choose a mounting location that offers a flat, rigid mounting surface capable of supporting the weight of the equipment. The unit weighs 25 lbs (11.4 kg) maximum. Mount the equipment in a suitable environment. These enclosures are designed for NEMA 1 environments and are manufactured of painted steel.

Check to make certain that there are no pipes, wires, or other mounting hazards in the immediate mounting area that could create a problem. Also make sure you have enough clearance around the enclosure to run wiring to it safely. EIG recommends at least 2 feet of clearance around the enclosure.

Carefully remove all packing material from the unit. Even though an equipment inspection was made when the equipment was received, make another careful inspection of the enclosure and the devices inside as packing material is removed. Be especially alert for distorted metal, loose wires, or damaged components. This is important because wiring can come loose in shipping and could cause a short circuit or voltage to be on the wrong terminal. Please inspect to make sure all the wiring is in the proper place and all connections are tight. Refer to figures 2.1 and 2.2 for internal wiring schematics.

WARNING!

Extreme care shall be taken when mounting the enclosure, and making wire entry holes, to prevent metal chips, filings, and other contaminants from entering the enclosure which may damage the equipment and create a hazardous condition.

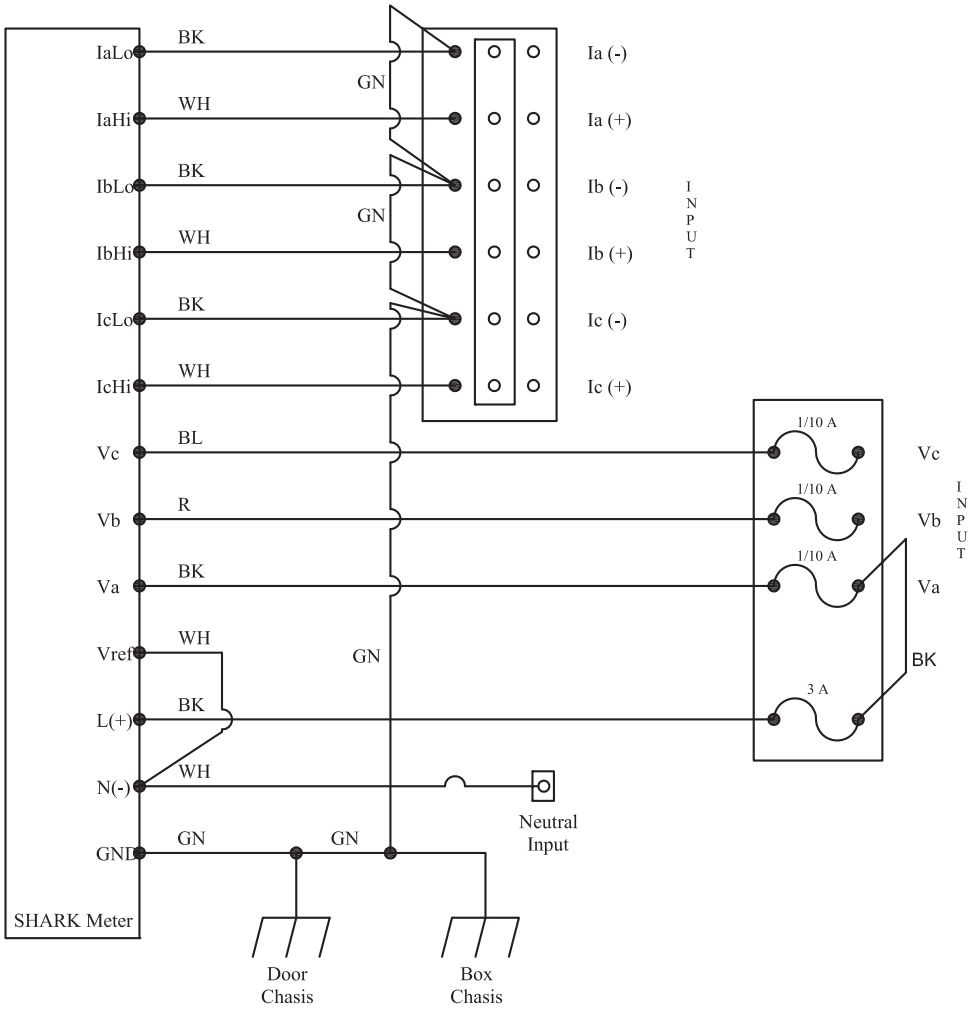

Figure 2.1: 120V Internal Wiring Schematic

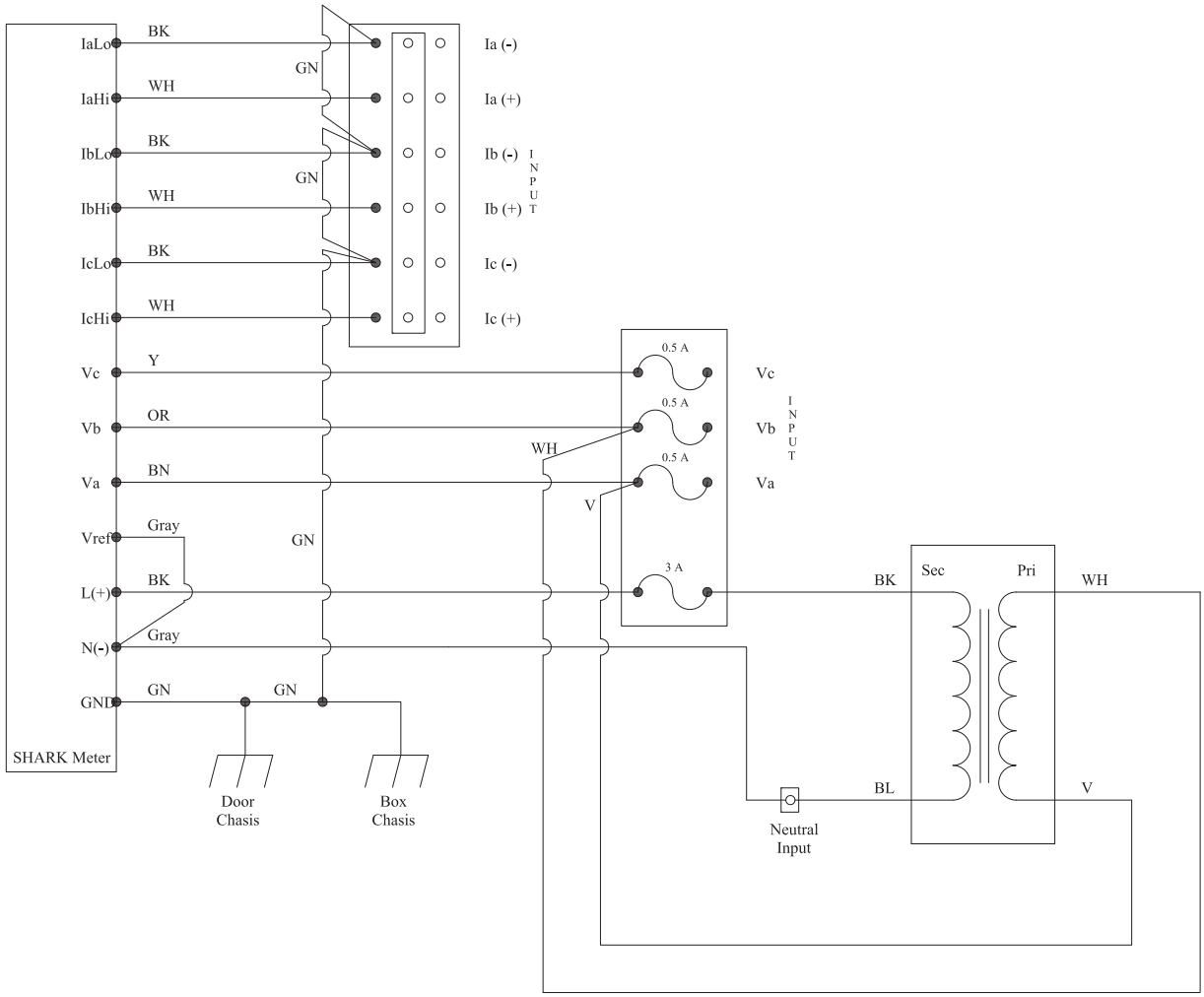

Figure 2.2: 277V Internal Wiring Schematic

2.1: Recommended Procedures for Wire Entry Hole Cutting

The enclosure does not come with wire entry holes (punch entries). They must be cut in the location you want depending on the installation. See Figure 2.3 for the locations that EIG recommends.

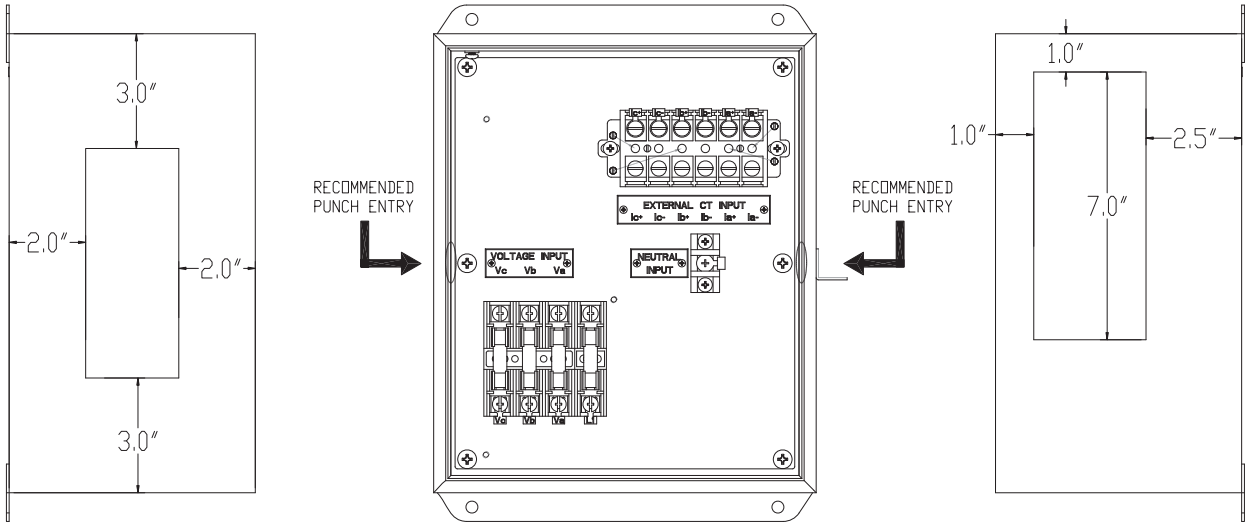

Figure 2.3: Location of Recommended Punch Entries

CAUTIONS!

- There are numerous methods for making wire entry holes in the enclosure but it is imperative that no loose material generated during the process remains in the enclosure. During installation and cutting the wire holes, all equipment mounted inside or on the enclosure shall be protected from loose material.

- No matter what procedure is used the installer shall verify that the hole cutting process will not damage any of the wiring or components installed inside or on the enclosure.

The two recommended procedures for cutting the wire entry holes are as follows:

- Use a "C" frame punch to cut the wire entry holes. This type of punch does not require a pilot hole. A typical "C" frame punch is shown below.

Figure 2.4: “C” Frame Punch

- Regular punch:
  1. Place a magnet inside the enclosure where the pilot hole is to be cut and completely cover the area with masking tape (or other very sticky tape).
  2. Drill the pilot hole from the outside and do not let the drill pass more than ¼" into the enclosure.
  3. Remove the tape, magnet, and cuttings and punch the hole.

After wiring and before energizing, vacuum the inside of the enclosure to make sure that it is free of foreign material. If a vacuum is not available use an alternate method to clean the inside of the enclosure. Do not use compressed air (or pressurized gas) to clean the inside of the enclosure as this may force cuttings into areas that cannot be seen, creating a hazardous condition.

IMPORTANT! All wire entry into the enclosure shall be accomplished with the use of recognized fittings or strain reliefs. Bare holes shall not be used.

2.2: Installation

Refer to the following diagrams for enclosure and mounting dimensions.

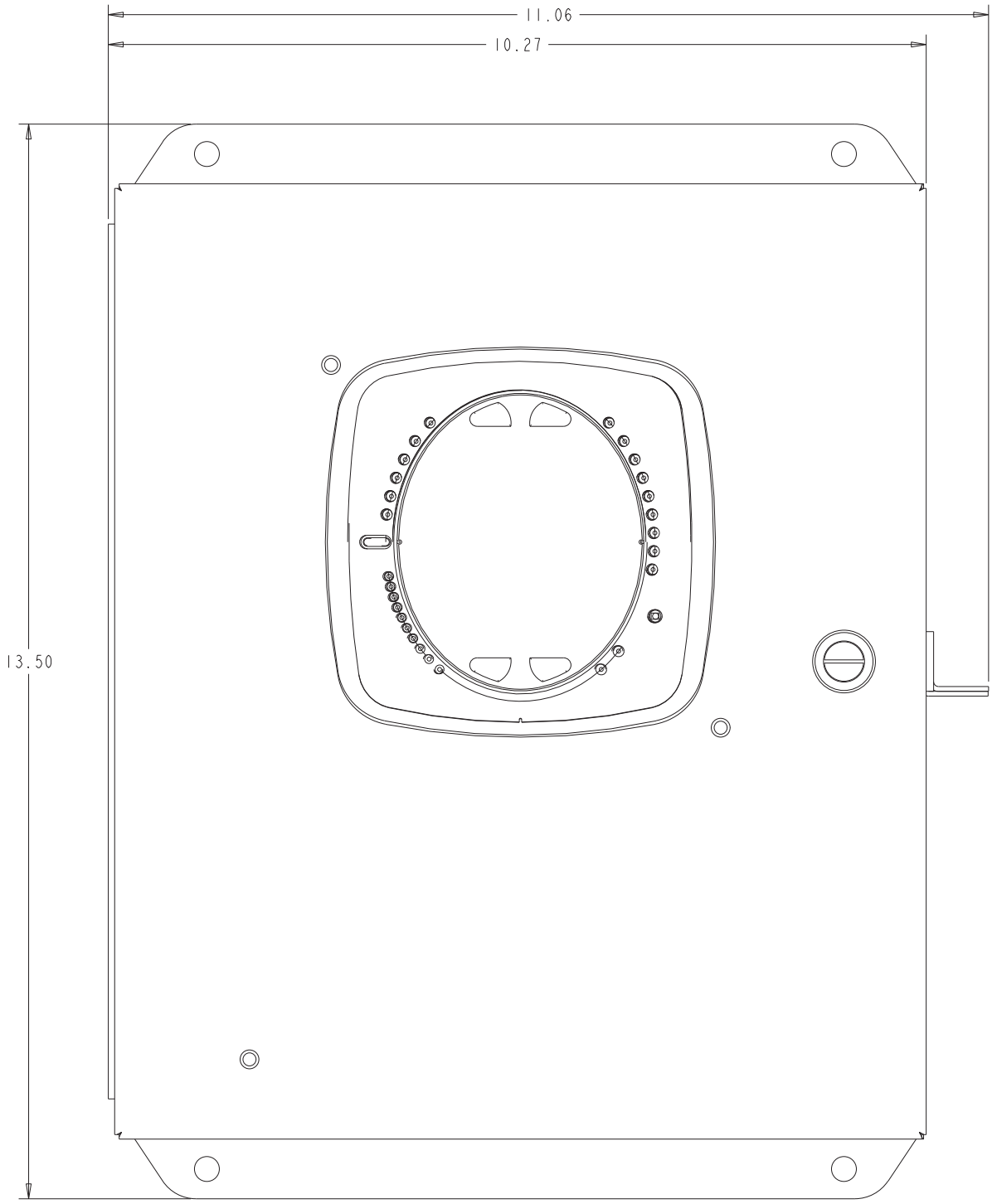

Figure 2.5: Enclosure Front Dimensions

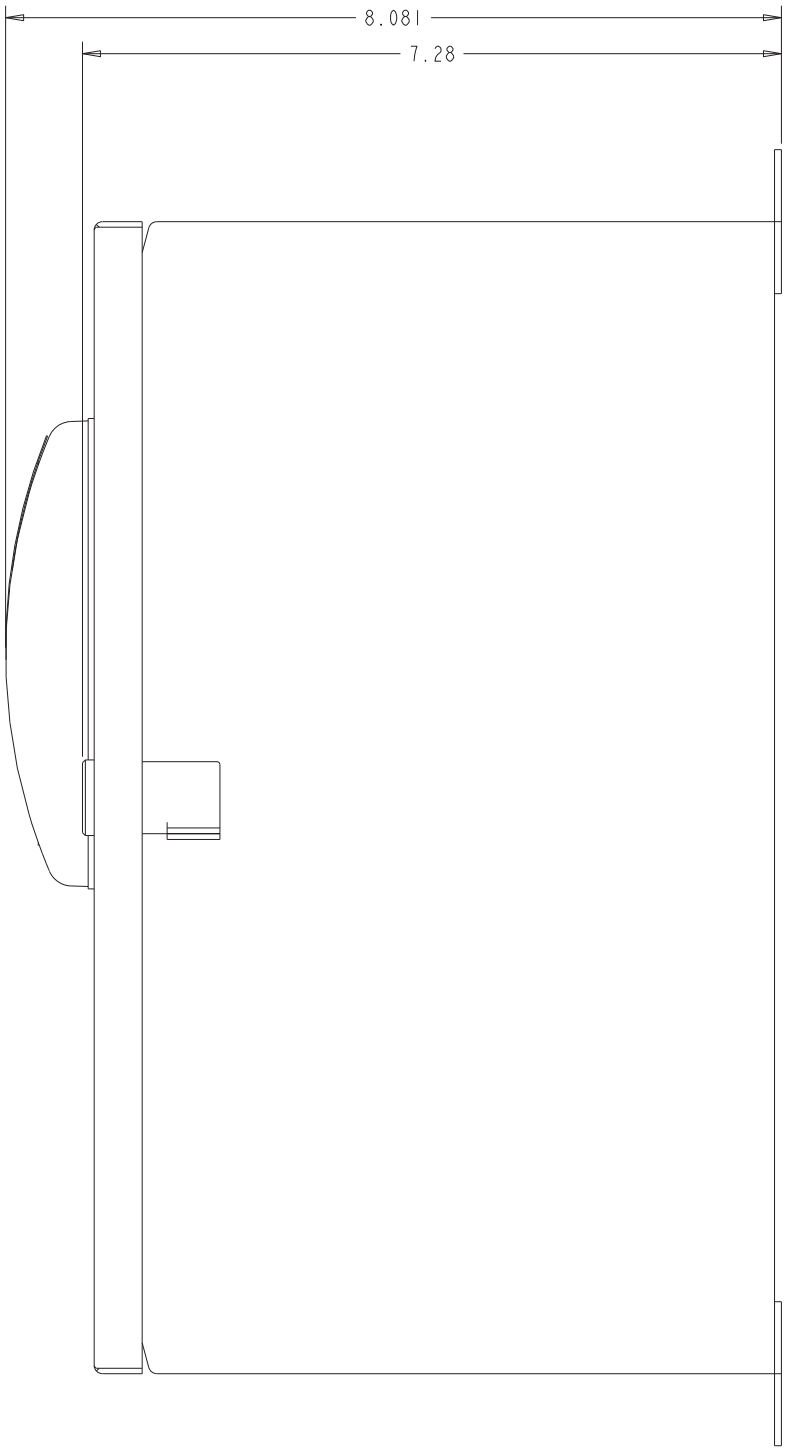

Figure 2.6 Enclosure Side Dimensions

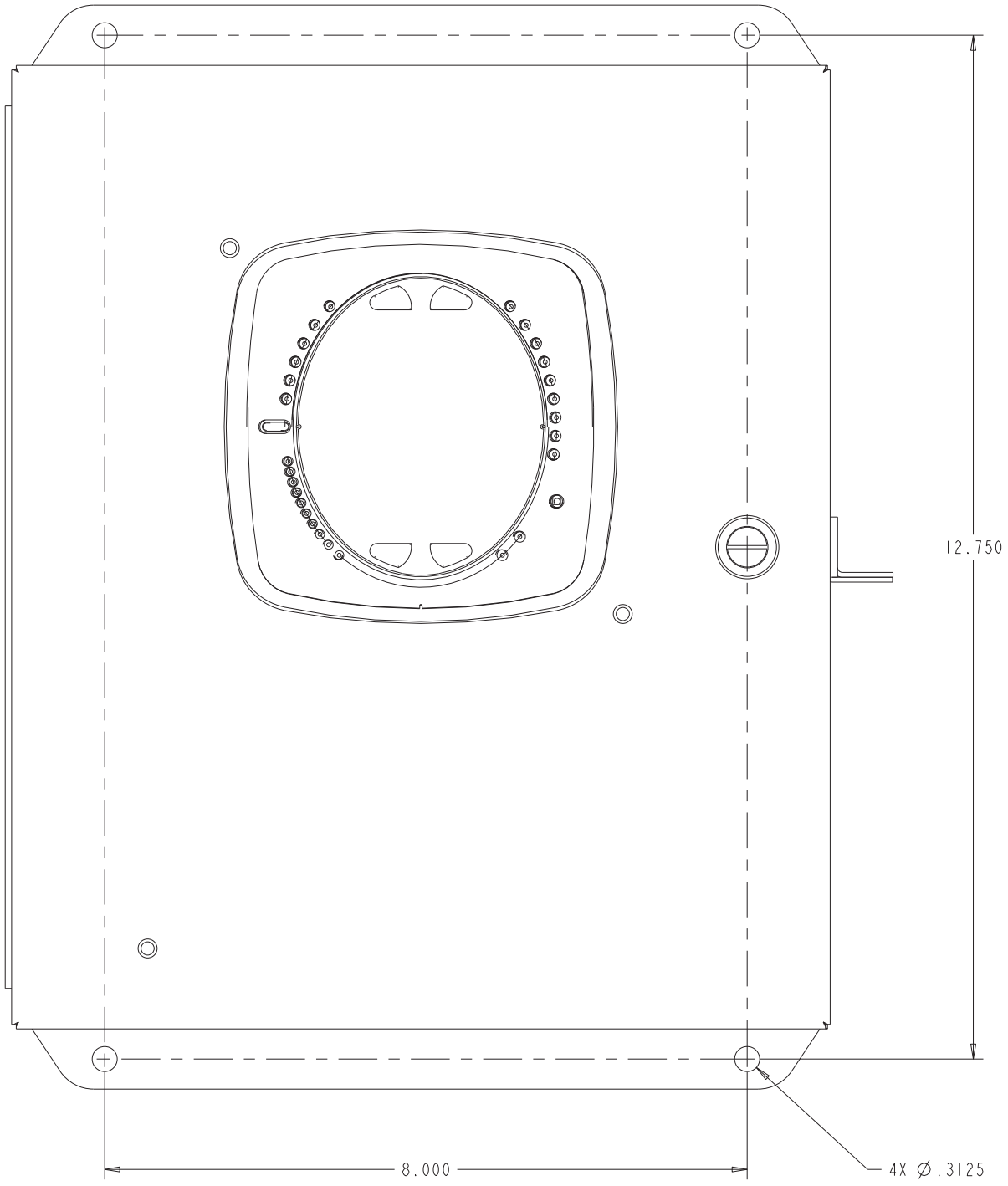

Figure 2.7: Mounting Hole Dimensions

2.2.1: Installation Steps

1. Install the 4 required mounting bolt anchors.

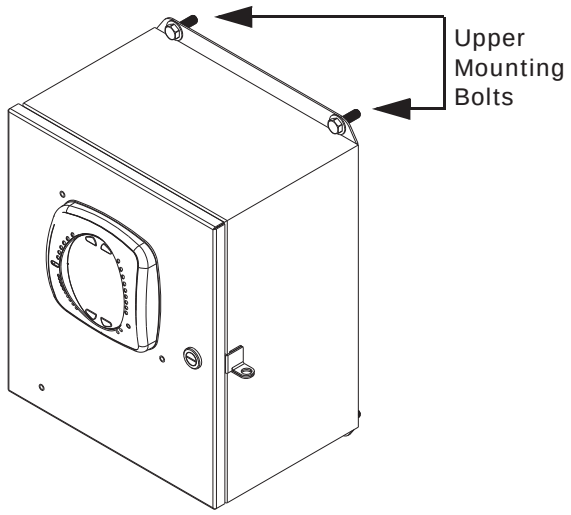

Figure 2.8: Mounting Bolt Installation, Upper Bolts

2. Gently lift the enclosure and guide the top mounting holes over the anchors. Install the two bolts but do not tighten them.

3. While still supporting the enclosure, install the two lower mounting bolts in the lower mounting flange, but do not completely tighten them. Use shims, if required, to prevent deformation of the enclosure when tightening the bolts, if the mounting surface is distorted.

4. Tighten all four mounting bolts after any required shimming is completed. See the figure below.

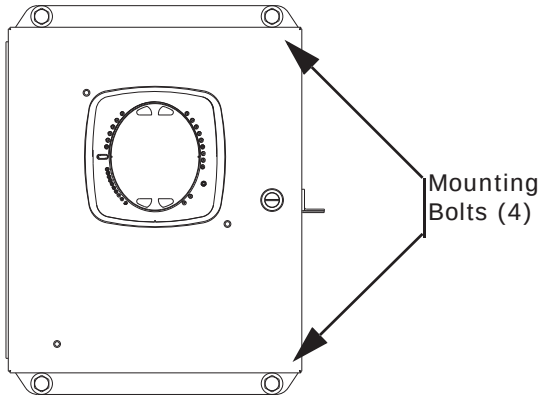

Figure 2.9: Mounting Bolt Location

2.3: Door-locking Instructions

The enclosure has been fitted with means for securing the door so it cannot be opened or tampered with. The padlock bracket can be secured in place with a padlock (3/8 inch shackle diameter). See the figure below.

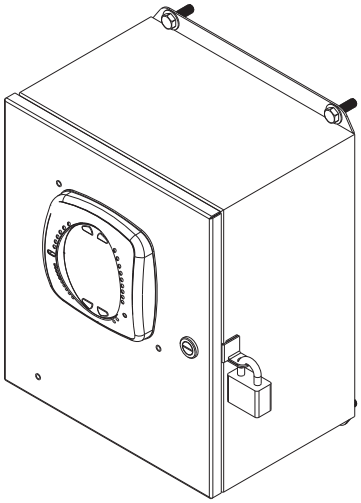

Figure 2.10: Door with Lock

3. Electrical Wiring

The Self-Enclosed Shark® Meter Assembly is factory wired and tested. Installation requires solidly mounting the enclosed unit and connecting field wiring. This document has diagrams of wiring options. Review and understand the appropriate diagrams for the unit you have ordered.

NOTE: Internal fuse block and CT shorting block terminations can accommodate #10 to #14 AWG wire. Consult your local and/or National Electric Code for external wiring requirements.

Both enclosure models are pre-wired and programmed for a three-phase, four-wire Wye system requiring 3 current transformers. The enclosures may also be used on three- wire network systems (two CT's), single-phase three-wire systems (two CT's), or single-phase-Neutral two-wire systems (one CT "120" option only).

Enclosure models with a "277" in the part number contain a single phase step down control power Transformer designed for a primary of 480 VAC and secondary voltage of 120 VAC.

NOTE: The current inputs are only to be connected to external current transformers provided by the installer. The CT's shall be Listed to ANSI/IEEE C57.13 and rated for the current of the meter used.

A DISCONNECTING MEANS AND UPSTREAM PROTECTION SHOULD BE INSTALLED FOR ALL CIRCUITS. A SHORT-CIRCUIT–TYPE TERMINAL BLOCK IS PROVIDED FOR THE CURRENT TRANSFORMER CIRCUIT.

INPUT WIRING SPECIFICATIONS			
Location	**Wire Size**	**Screw Size**	**Maximum Torque**
Shorting Block	#6-22 AWG CU	#10-32	20 lbf-in (2.3 N-m)
Fuse Block	#10-18 AWG CU	#10-32	20 lbf-in (2.3 N-m)
Neutral Wire	#12 max CU	#8-32	6 lbf-in (0.68 N-m)
Earth Ground	#10-12 AWG CU	#8-32	10 lbf-in (1.2 N-m)

3.1: Wiring Instructions

WARNING!

First connect Earth Ground as shown in the figure below.

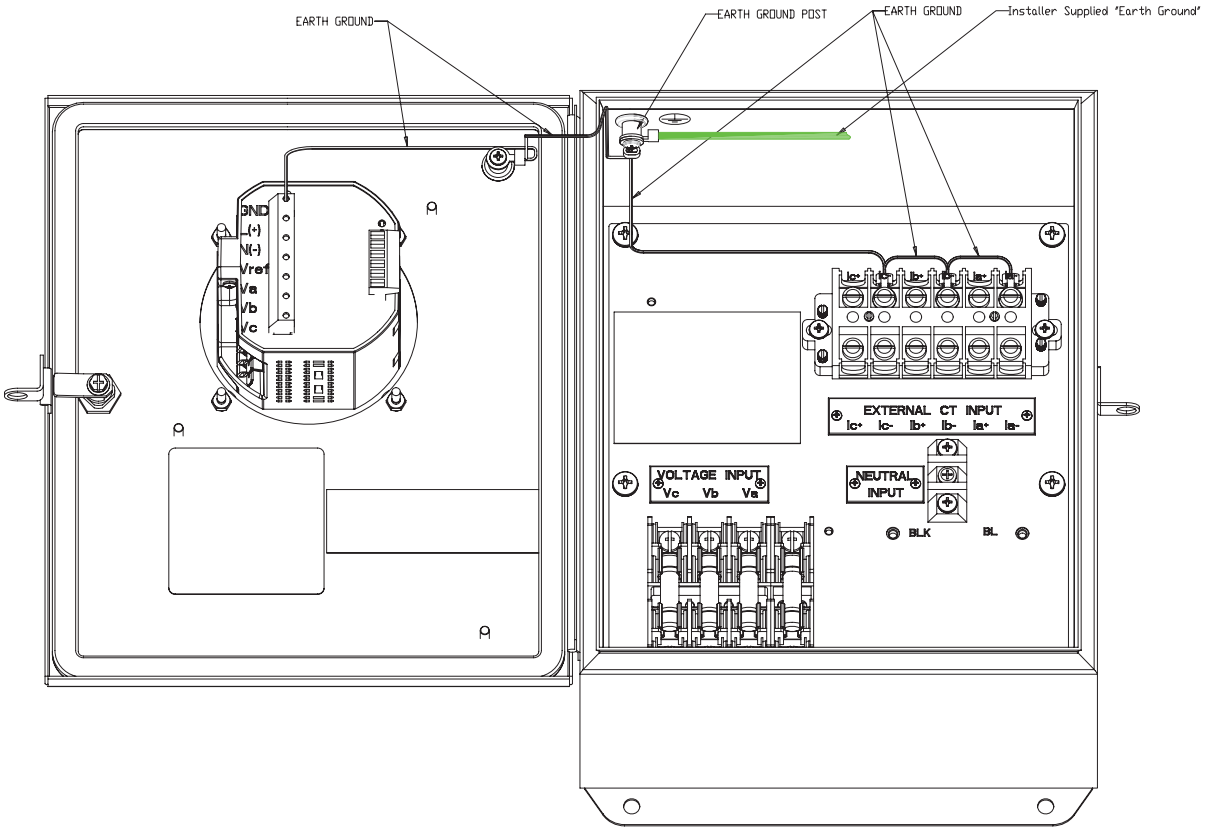

Figure 3.1: Earth Ground Connection

Understand the diagram(s) that pertain to your unit before you begin the field wiring. The following figures show the available wiring options. Understand your system and use the appropriate figures.

WARNING! CONTROL WIRING MAY HAVE VOLTAGE PRESENT THAT CAN CAUSE SEVERE PERSONAL INJURY OR DEATH. DE-ENERGIZE ALL CONDUCTORS BEFORE BEGINNING TO PERFORM ANY WIRING ACTIVITY TO OR WITHIN THE SELF-ENCLOSED SHARK® ASSEMBLY.

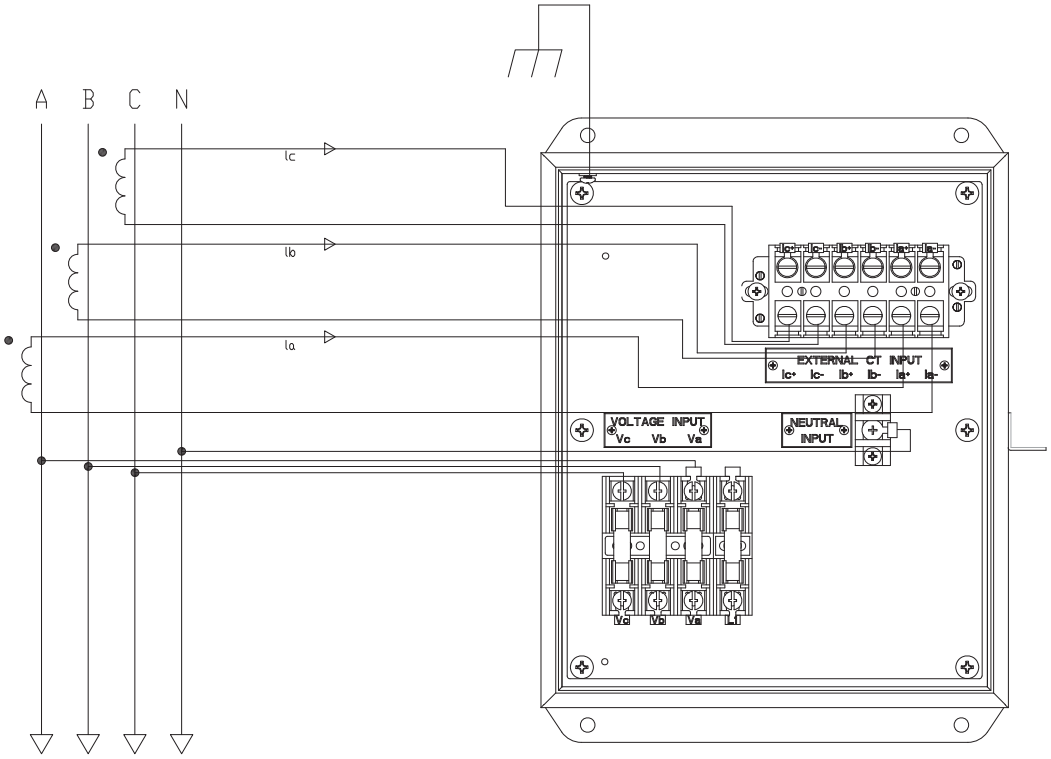

Figure 3.2: Wye Wiring for 120V Model

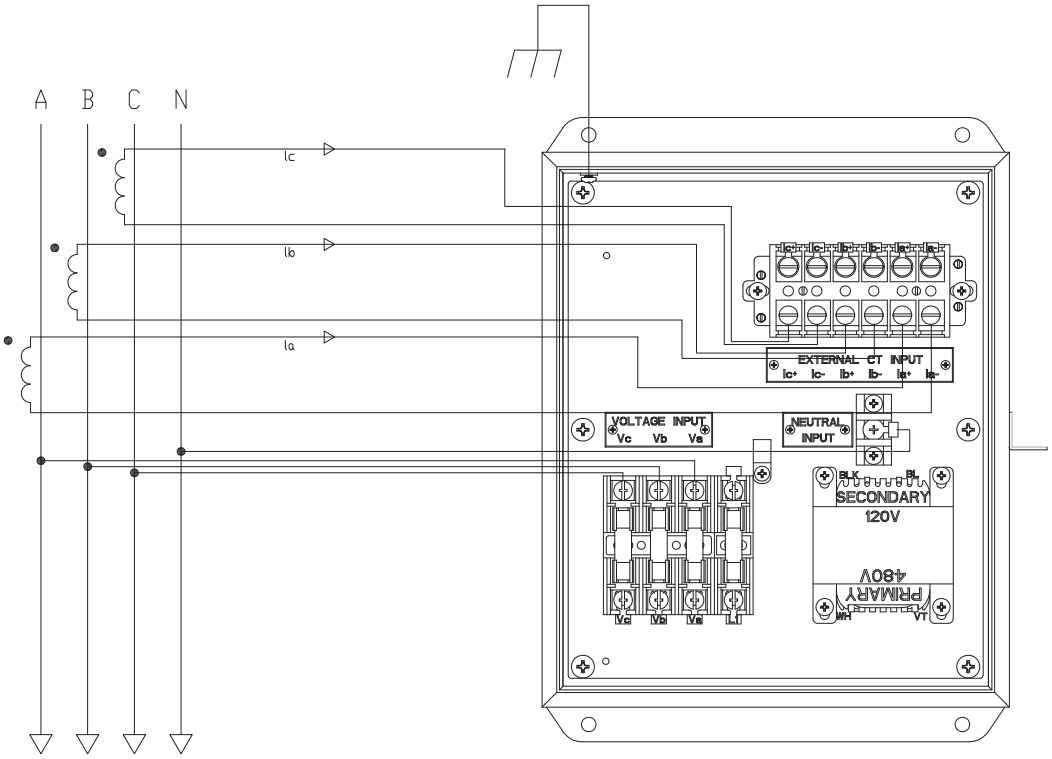

Figure 3.3: Wye Wiring for 277V Model

3.2: 3 Wire Delta, 3 CT Hookup

The enclosure is shipped pre-wired for a 4 wire Wye installation with the meter's voltage reference (Vref) tied to the Neutral input (N(-)) via a jumper located on the connector of the meter. If the enclosure is to be used on three wire Delta circuits where no neutral exists, the jumper on the connector must be moved. This requires that the jumper's connection to N (-) must be removed and then moved to Vb to allow the meter's Vref to be common with Vb. See the figure below.

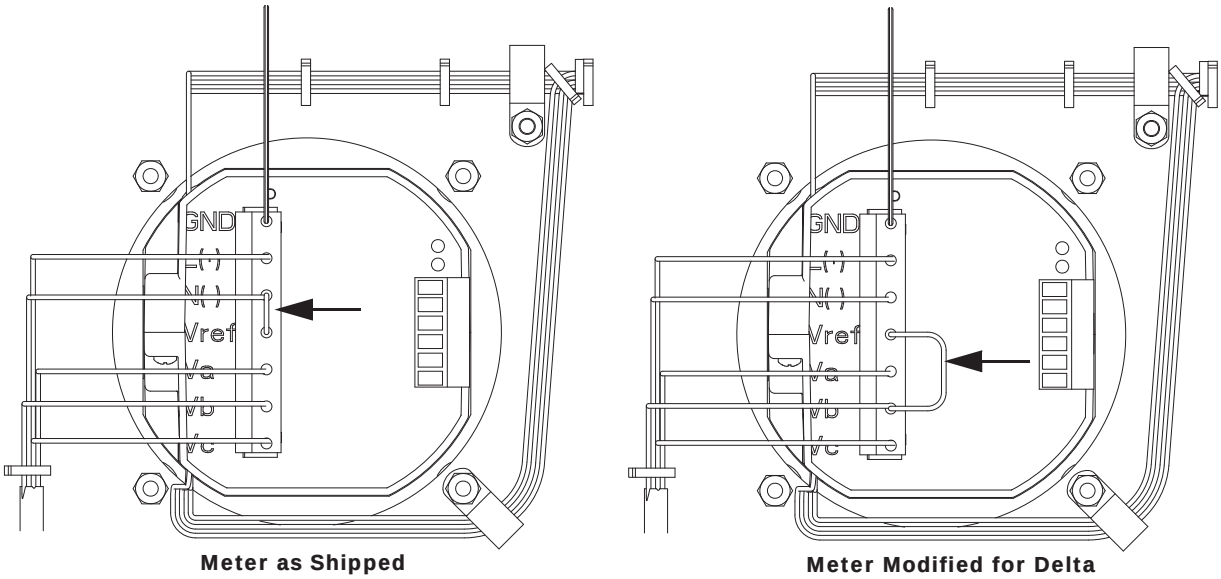

Figure 3.4: Wiring as Shipped, and Modified for Delta

- An external wired Neutral connection to the Neutral Terminal is not necessary.

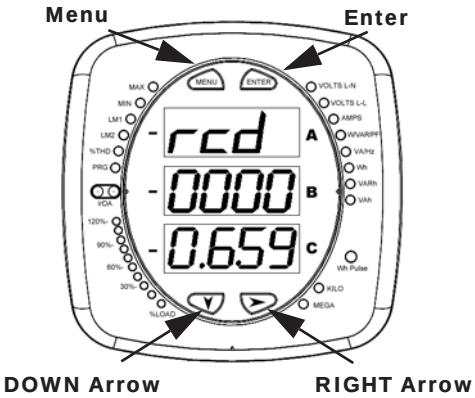

- You must reprogram the meter for a Delta 2 CT hookup. Using the meter's faceplate (see figure on the right, follow this procedure:
  1. Push the MENU button - rSt will be blinking on the top line of the display.
  2. Press the DOWN ARROW once. CFG (Configuration) moves to the top of the display.
  3. Press the ENTER button. You will see the Configuration menu, shown on the right.

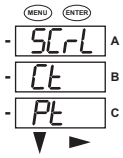

4. Press the DOWN ARROW until you see Cnct, then press the ENTER button to go to the Connection setting screen, shown on the right.

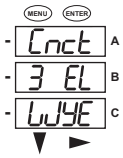

5. The current setting is shown in the second line. Press the DOWN ARROW to choose 2 Ct del (Delta) - see the screen on the right.

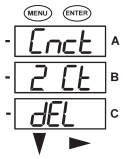

6. Press the MENU button twice. You will see the Store Settings screen (Stor ALL?).

7. The screen's default setting is YES. To save the settings you've made, press the ENTER button. You will see the confirmation screen (Stor ALL done) and then the meter resets.

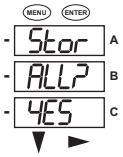

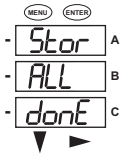

4: Operation

The 120-240 Volt Self-Enclosed Shark® Meter Assembly (-120 Model) comes equipped with three 10mm x 38mm, 600V, 100mA, fast-acting fuses and one 10mm x 38mm, 500V, 3A, Time Delay fuse for the protection of the meter's sense voltage and control power circuits, respectively.

The 277 Volt Self-Enclosed Shark® Meter Assembly (-277 Model) comes equipped with three 10mm x 38mm, 600V, 500mA, fast-acting fuses and one 10mm x 38mm, 500V, 3A, Time Delay fuse for the protection of the meter's sense voltage and control power circuits, respectively.

A disconnecting means and upstream protection should be installed for all circuits. A short-circuit type terminal block is provided for the current transformer circuit. The terminal blocks for the current circuits are short-circuit type. Shorting screws are included (see instructions in Section 5.1).

The temperature rating for enclosure operation is (-20 to +50)^{o} C.

Refer to the Shark® 100/100B or Shark® 200 User manual on the enclosed CD for specific operating instructions for the meter in your enclosure.

This page intentionally left blank.

5. Maintenance

The Self-Enclosed Shark® Meter Assembly is designed to be relatively maintenance-free under normal use. However, because of the variability of application conditions and the importance placed on dependable operation and inspection, you should perform maintenance checks on a regularly scheduled basis. Visually inspect for loose parts, wires, and/or hardware; inspect for discoloration of insulation and damaged or discolored components; be alert for accumulation of dirt and/or moisture on structure; check operation of disconnecting means and continuity of fuses, where applicable.

5.1: Removing a Meter From Service

Follow these steps:

1. De-energize all circuits feeding the case.

2. If possible de-energize lines that the CT's are on.

3. Install 4 shorting screws, where shown, on the CT connection block - instructions follow.

WARNING! If the meter must be removed from service, the secondary side of the current transformers **MUST** be short circuited to prevent a dangerous high voltage condition from appearing across the secondary wires of the current transformer. **Arcing and damage to personnel and/or equipment can occur if the screws provided on the shorting block are not installed in the correct locations, prior to disconnecting any wires.**

The four brass screws that are parked on each corner of the shorting block are used to short the three high (+) sides and one low (-) side of the CT outputs to the brass bar that is across the middle of the shorting block. The pre-installed jumper connects all lows together.

The brass screws need to be screwed down until the end of the screw makes contact with the terminal strip below, enabling the brass bar to become electrically common with the terminal strip.

The figures below shows which terminals/holes the screws must be installed in to safely short the secondary of the CT's.

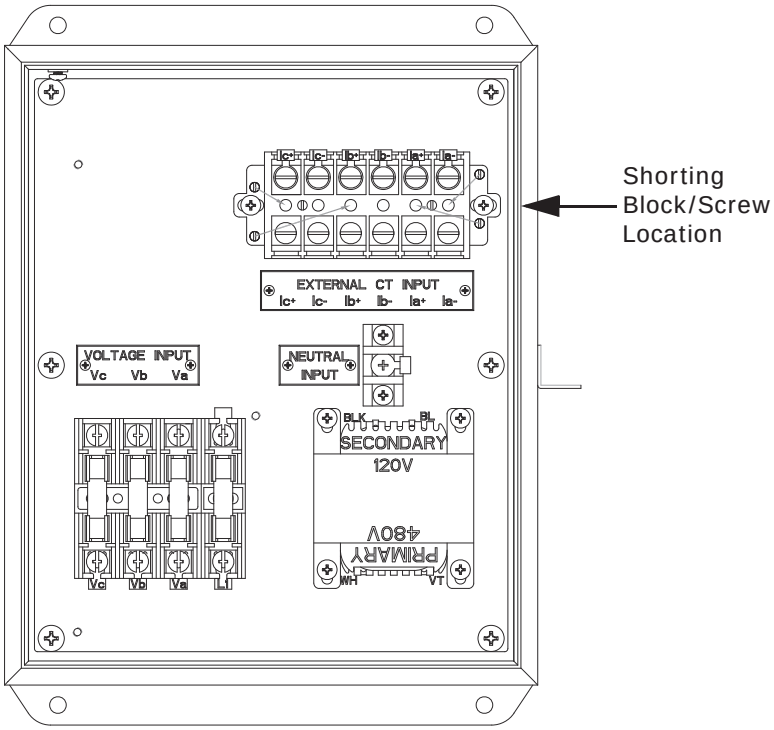

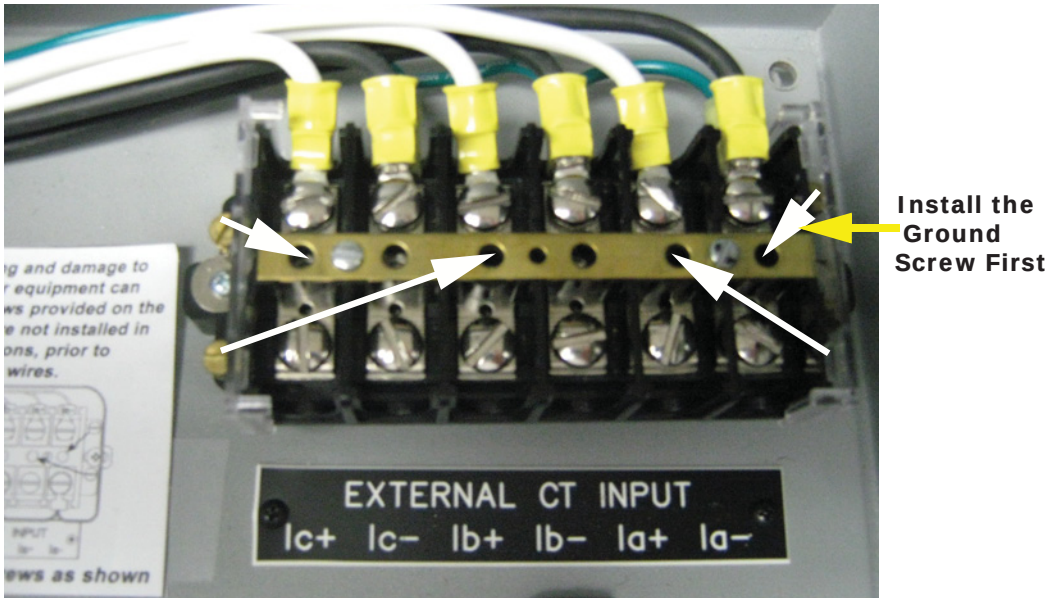

Figure 5.1: Shorting the CTs

WARNING! When you re-install the meter, make sure all CT connections are made **BEFORE** removing the shorting screws, and then return the screws to their holder. See Section 5.2.

4. Remove the 4 fuses from the fuse block.

5. Un-screw and disconnect the 6 current leads to the meter.

6. Disconnect all connectors to the meter.

7. Remove the 4 mounting nuts.

8. Remove the meter.

5.2: Reinstalling the Meter

Follow this procedure to reinstall the meter:

1. Place meter in cover cutout.

2. Tighten the 4 mounting nuts.

3. Insert all connectors into the appropriate sockets on the back of the meter.

4. Connect the 6 current leads to the meter making sure they are attached in the proper order.

5. Install the 4 fuses in the fuse block in their proper location.

6. Remove the 4 shorting screws from the CT connection block and return them to their storage positions. See the figure below.

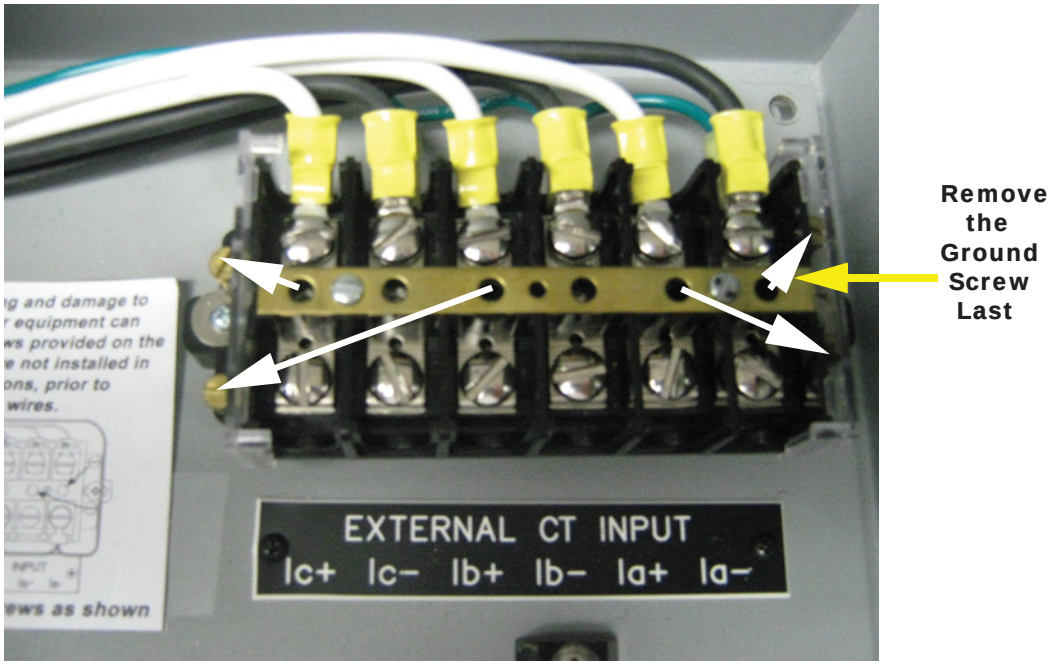

Figure 5.2: Shorting Screws Returned to Their Storage Positions

7. Verify that no foreign material remains inside the enclosure, if there is clean out.

8. Energize all circuits and verify operation.

6. Ordering Information

Shark® 50 Meter in Enclosure:

ENCSHK50 - 277 - V2- 485P
1 2 3 4

1. Model:

   ENCSHK50 - Shark® 50 Meter

2. Voltage:

   120 -120-240 Volts

   277 -277 Volts

3. V-Switch™ Key Pack: see table below

Meter	V1	V2	V3
Shark® 50	Multi-function meter	V1 plus Power and Frequency	V2 plus Energy counters

4. Communication

   X - None

   485P: RS485 and KYZ Pulse Output

Example:

ENCSHK50-277-V2-485P

(Shark® 50 meter with 277 Volt option with Control Power Transformer, V-2 V-Switch™ key, and RS485/KYZ Pulse Output)

Shark® 100 Meter in Enclosure:

ENCSHK100 - 277 - 60 - 10- V2- D2 - 485P
1 2 3 4 5 6 7

1. Model:

   ENCSHK100 - Shark® 100 Meter

2. Voltage:

   120 -120-240 Volts

   277 -277 Volts

3. Frequency:

   50: 50 Hz System

   60: 60 Hz System

4. Current Input:

   10: 5 Amp Secondary

   2: 1 Amp Secondary

5. V-Switch™ Key Pack: see table below

Meter	V1	V2	V3	V4
Shark® 100	Multi-function meter	V1 plus Power and Frequency	V2 plus DNP 3.0 and Energy counters	V3 plus Limits and Harmonics

6. Power Supply:

   D2 Option: Universal, (90 to 265) VAC @50/60Hz or (100 to 370) VDC

7. Communication

   X - None

   485P: RS485 and KYZ Pulse Output

   INP10: 100BaseT Ethernet and KYZ Pulse Output

Example:

ENCSHK100-277-60-10-V2-D2-485P

(Shark® 100 meter with 277 Volt option with Control Power Transformer, 60 Hz System, 5 Amp Secondary, V-2 V-Switch™ key, D2 power supply, and RS485/KYZ Pulse Output)

Shark® 100B Meter in enclosure:

ENCSHK100B - 277 - 60 - 10- D2

1 2 3 4 5

1. Model:

   ENCSHK100B - Shark® 100B Meter

2. Voltage:

   120 -120-240 Volts

   277 -277 Volts

3. Frequency:
   50: 50 Hz System
   60: 60 Hz System

4. Current Input:
   10: 5 Amp Secondary
   2: 1 Amp Secondary

5. Power Supply:
   D2: Universal, (90 to 265) VAC @50/60Hz or (100 to 370) VDC

Example:

ENCSHK100B-277-60-10-D2

(Shark® 100B meter with 277 Volt option with Control Power Transformer, 60 Hz System, 5 Amp Secondary, and D2 power supply)

Shark® 200 Meter in enclosure:

ENCSHK200	-	277	-	60	-	10	-	V2	-	D2	-	INP100S	-	X
1		2		3		4		5		6		7		8

1. Model:
   ENCSHK200 - Shark® 200 Meter

2. Voltage:
   120 -120-240 Volts
   277 -277 Volts

3. Frequency:
   50: 50 Hz System
   60: 60 Hz System

4. Current Input:
   10: 5 Amp Secondary
   2: 1 Amp Secondary

5. V-Switch™ Key Pack: see table below

Meter	V1	V2	V3	V4	V5	V6
Shark® 200	Multi-function meter	V1 plus 2 MB data-logging memory	V2 plus %THD	V3 plus Limits and control functions	V4 plus 3 MB data-logging memory and 64 samples/ cycle wave-form recorder	V5 plus 4 MB data-logging memory and 512 samples/ cycle wave-form recorder

6. Power Supply:

D2: Universal, (90 to 265) VAC @50/60Hz or (100 to 370) VDC

7.and 8. I/O Slots 1 and 2:

X: None

INP100S: 10/100BaseT Ethernet

RO1S: 2 Relay outputs/2 Status inputs

PO1S: 4 Pulse outputs/4 Status inputs

1mAOS: 4 Channel Analog output 0-1 (bidirectional)

20mAOS: 4 Channel Analog output 4-20mA

FOSTS: Fiber Optic Output ST terminated

FOVPS: Fiber Optic Output Versatile Link terminated

Example:

ENCSHK200-277-60-10-V2-D2-INP100S-X

(Shark® 200 meter with 277 Volt option with Control Power Transformer, 60 Hz System, 5 Amp Secondary, V-2 V-Switch™ key, D2 power supply, 10/100BaseT Ethernet in Card Slot 1 and no card in Card Slot 2)